general data/description

created: 05.12.2025 / 01 page: 1 / 2

article KR 26 OP MF10X1 439B SK LX3 **Art-No.** 54537

brand SKA **weight/kg** 0.059

remark Load ratings calculated according norms for rolling bearings. Rotational speed for F < 0.05 C0rw. Load ratings and rotational speed also depending on mating track.

description

KR	Design
26	Size
OP	Optimized profile
MF10X1	Metric fine thread, with locknut
439B	Hexagon nut
SK	Hexagon socket

greasing

LX3	SHELL GADUS S3 V220C 2

dimensions and tolerances

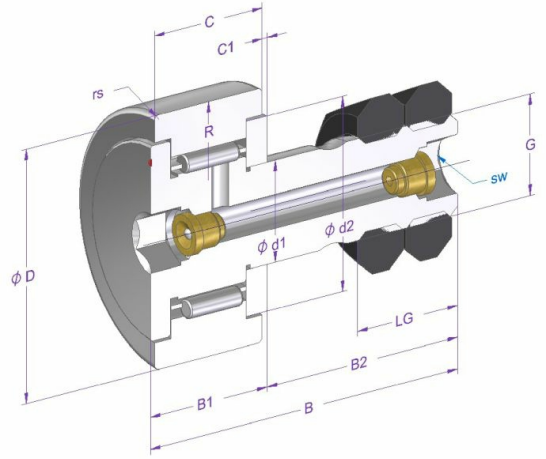

dimension	Description	[mm]	tolerance [µm]	DIN/ISO
d1	shaft diameter	10	0 / -15	ISO 7063
d2	inner shoulder diameter	17.5		
D	nominal outer diameter	26	0 / -50	ISO 7063
C	outer ring width	12	0 / -120	620-2
C1	distance	0.6		ISO 7063
B	length	36	-300 / 600	WERKSNORM
B1 max.	width	13.2		ISO 7063
B2	shaft lenght	23		ISO 7063
rs min.	minimal chamfer dimension	0.3		ISO 7063
G	thread	M10x1		ISO 7063
LG	thread length	12		ISO 7063
sw	wrench size	5		
R	radius outer ring	OP		
Crw [N]	Effective dynamic load rating	5000		
C0rw [N]	Effective static load rating	4750		
Curw [N]	Effective fatigue limit load	359		

calculation and operating data

load ratings	dynamic C [N]	fatique load limit load Cu [N]	DIN/ISO	static Co [N]	DIN/ISO
	5290	728	281	5830	76

speed of rotation limit	reference n [1/min]	grease n [1/min]	oil n [1/min]
		8000	

operating temperature	max. [°C]	min. [°C]
	120	-20

bearing clearance	radial min. [µm]	max. [µm]
	10	35

Hans Saurer Kugellager AG
Niederfeld 38
CH-9320 Stachen

article KR 26 OP MF10X1 439B **Art-No.** 54537
SK LX3

material specification

description	material	DIN/ISO	hardness
Outer ring	100Cr6	683-17	58-65
Roller stud	16CrMo4		
Needle rollers	100Cr6	683-17	58-66
Thrust washer	100Cr6	683-17	58-65
Cage	Sheet steel		

All information in this document was provided and checked carefully. Nevertheless, we can not assume any liability for incomplete or faulty information.