general data/description

created: 05.12.2025 / 01 page: 1 / 2

article KR 26 OP SK LX3 **Art-No.** 54536 **brand** SKA **weight/kg** 0.059

remark Load ratings calculated according norms for rolling bearings. Rotational speed for F < 0.05 C0rw. Load ratings and rotational speed also depending on mating track.

description

KR	Design
26	Size
OP	Optimized profile
SK	Hexagon socket

greasing

LX3	SHELL GADUS S3 V220C 2

dimensions and tolerances

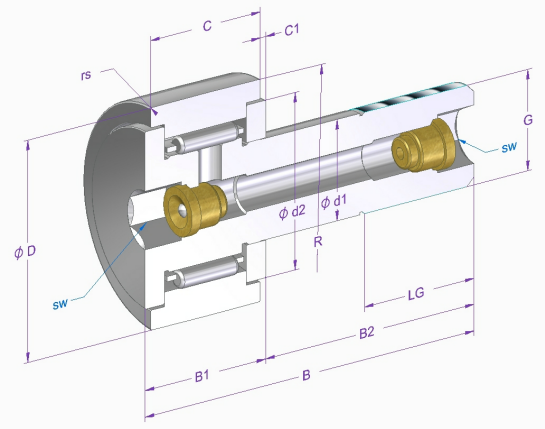

dimension	Description	[mm]	tolerance [µm]	DIN/ISO
d1	shaft diameter	10	0 / -15	ISO 7063
d2	inner shoulder diameter	17.5		
D	nominal outer diameter	26	0 / -50	ISO 7063
C	outer ring width	12	0 / -120	620-2
C1	distance	0.6		ISO 7063
B	length	36	-300 / 600	WERKSNORM
B1 max.	width	13.2		ISO 7063
B2	shaft lenght	23		ISO 7063
rs min.	minimal chamfer dimension	0.3		ISO 7063
G	thread	M10x1		ISO 7063
LG	thread length	12		ISO 7063
sw	wrench size	5		
R	radius outer ring	OP		
Crw [N]	Effective dynamic load rating	5000		
C0rw [N]	Effective static load rating	4750		
Curw [N]	Effective fatigue limit load	359		

calculation and operating data

load ratings	dynamic C [N]	fatique load limit load Cu [N]	DIN/ISO	static Co [N]	DIN/ISO
	5290	728	281	5830	76

speed of rotation limit	reference n [1/min]	grease n [1/min]	oil n [1/min]
		8000	

operating temperature	max. [°C]	min. [°C]
	120	-20

bearing clearance	radial min. [µm]	max. [µm]
	10	35

article KR 26 OP SK LX3 **Art-No.** 54536

material specification

description	material	DIN/ISO	hardness
Outer ring	100Cr6	683-17	58-65
Roller stud	16CrMo4		
Needle rollers	100Cr6	683-17	58-66
Thrust washer	100Cr6	683-17	58-65
Cage	Sheet steel		

All information in this document was provided and checked carefully. Nevertheless, we can not assume any liability for incomplete or faulty information.