Hans Saurer Kugellager AG
Niederfeld 38
CH-9320 Stachen

data sheet

general data/description

created: 17.08.2023 / 01

article KR 19 PP OP SK LX3 **Art-No.** 53201

brand SKA **weight/kg** 0.031

remark Load ratings calculated according norms for rolling bearings. Rotational speed for F < 0.05 C0rw. Load ratings and rotational speed also depending on mating track.

description

KR	Design
19	Size
PP	Seals on both sides
OP	Optimized profile
SK	Hexagon socket

greasing

LX3	SHELL GADUS S3 V220C 2

dimensions and tolerances

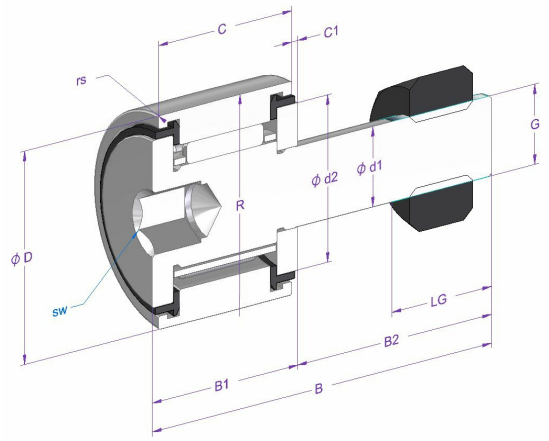

dimension	Description	[mm]	tolerance [µm]	DIN/ISO
d1	shaft diameter	8	0 / -15	ISO 7063
d2	inner shoulder diameter	15		
D	nominal outer diameter	19	0 / -50	ISO 7063
C	outer ring width	11	0 / -120	DIN 620-2
C1	distance	0.6		ISO 7063
B	length	32	-300 / 600	WERKSNORM
B1 max.	width	12.2		ISO 7063
B2	shaft lenght	20		ISO 7063
rs min.	minimal chamfer dimension	0.15		ISO 7063
G	thread	M8x1.25		ISO 7063
LG	thread length	10		ISO 7063
sw	wrench size	4		
R	radius outer ring	OP		
Crw [N]	Effective dynamic load rating	3290		
C0rw [N]	Effective static load rating	3180		
Curw [N]	Effective fatigue limit load	245		

calculation and operating data

load ratings	**dynamic C [N]**	**fatique load limit load Cu [N]**		**DIN/ISO**	**static Co [N]**	**DIN/ISO**
	4010	540		281	4180	76
speed of rotation limit	**reference n [1/min]**	**grease n [1/min]**	**oil n [1/min]**			
		11000				
operating temperature	**max. [°C]**	**min. [°C]**				
	100	-20				
bearing clearance	**radial min. [µm]**	**max. [µm]**				
	10	35				

Hans Saurer Kugellager AG
Niederfeld 38
CH-9320 Stachen

article KR 19 PP OP SK LX3 **Art-No.** 53201

material specification

description	material	DIN/ISO	hardness
Outer ring	100Cr6	683-17	58-65
Roller stud	16CrMo4		
Needle rollers	100Cr6	683-17	58-65
Thrust washer	100Cr6	683-17	58-65
Seals	PA66		
Cage	Sheet steel		

All information in this document was provided and checked carefully. Nevertheless, we can not assume any liability for incomplete or faulty information.