## general data/description

created: 16.08.2023 / 02 page: 1 / 2

**article** KR 16 PP OP SK LX3 **Art-No.** 53167

**brand** SKA **weight/kg** 0.018

**remark** Load ratings calculated according norms for rolling bearings. Rotational speed for F < 0.05 C0rw. Load ratings and rotational speed also depending on mating track.

**description**

| | |
|---|---|
| KR | Design |
| 16 | Size |
| PP | Seals on both sides |
| OP | Optimized profile |
| SK | Hexagon socket |

**greasing**

| | |
|---|---|
| LX3 | SHELL GADUS S3 V220C 2 |

## dimensions and tolerances

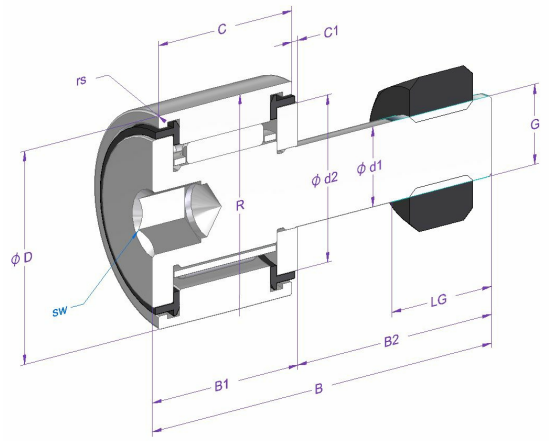


| dimension | Description | [mm] | tolerance [µm] | DIN/ISO |
|---|---|---|---|---|
| d1 | shaft diameter | 6 | 0 / -12 | ISO 7063 |
| d2 | inner shoulder diameter | 12.5 | | |
| D | nominal outer diameter | 16 | 0 / -50 | ISO 7063 |
| C | outer ring width | 11 | 0 / -120 | ISO 7063 |
| C1 | distance | 0.6 | | ISO 7063 |
| B | length | 28 | -300 / 600 | WERKSNORM |
| B1 max. | width | 12.2 | | ISO 7063 |
| B2 | shaft lenght | 16 | | ISO 7063 |
| rs min. | minimal chamfer dimension | 0.15 | | ISO 7063 |
| G | thread | M6x1 | | ISO 7063 |
| LG | thread length | 8 | | ISO 7063 |
| sw | wrench size | 4 | | |
| R | radius outer ring | OP | | |
| Crw [N] | Effective dynamic load rating | 3010 | | |
| C0rw [N] | Effective static load rating | 2710 | | |
| Curw [N] | Effective fatigue limit load | 180 | | |

## calculation and operating data

| | | | | | | |
|---|---|---|---|---|---|---|
| **load ratings** | **dynamic C [N]** | **fatique load limit load Cu [N]** | | **DIN/ISO** | **static Co [N]** | **DIN/ISO** |
| | 3570 | 435 | | 281 | 3400 | 76 |
| **speed of rotation limit** | **reference n [1/min]** | **grease n [1/min]** | **oil n [1/min]** | | | |
| | | 14000 | | | | |
| **operating temperature** | **max. [°C]** | **min. [°C]** | | | | |
| | 100 | -20 | | | | |
| **bearing clearance** | **radial min. [µm]** | **max. [µm]** | | | | |
| | 10 | 35 | | | | |

**Hans Saurer Kugellager AG**
**Niederfeld 38**
**CH-9320 Stachen**



**article** KR 16 PP OP SK LX3 **Art-No.** 53167

## material specification

| description | material | DIN/ISO | hardness |
|---|---|---|---|
| Outer ring | 100Cr6 | 683-17 | 58-65 |
| Roller stud | 16CrMo4 | | |
| Needle rollers | 100Cr6 | 683-17 | 58-65 |
| Thrust washer | 100Cr6 | 683-17 | 58-65 |
| Seals | PA66 | | |
| Cage | Sheet steel | | |

All information in this document was provided and checked carefully. Nevertheless, we can not assume any liability for incomplete or faulty information.