general data/description

created: 01.06.2023 / 01 page: 1 / 2

article NATR 17 PP **Art-No.** 53050 **brand** **weight/kg** 0.144

description

NATR	Design
17	Size
PP	Seals on both sides

remark Load ratings calculated according norms for rolling bearings. Rotational speed for F < 0.05 C0rw.

dimensions and tolerances

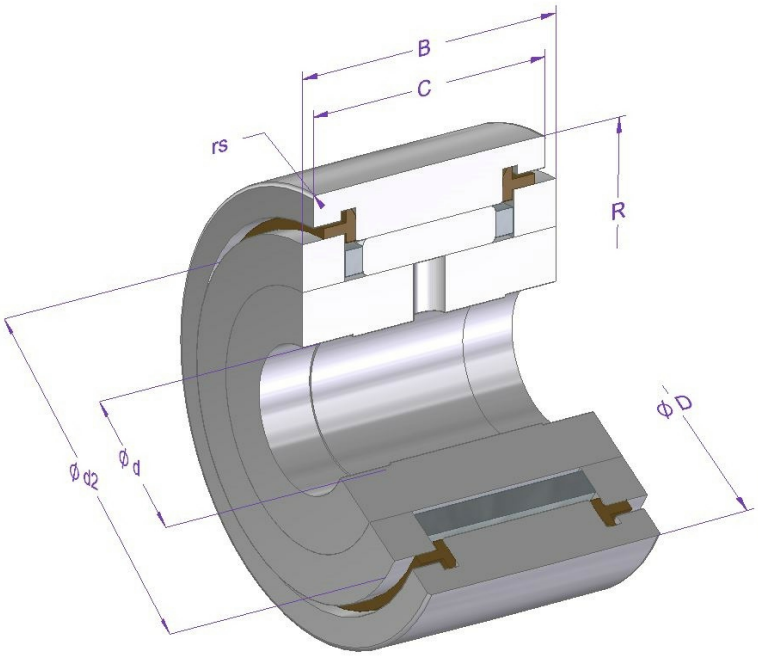

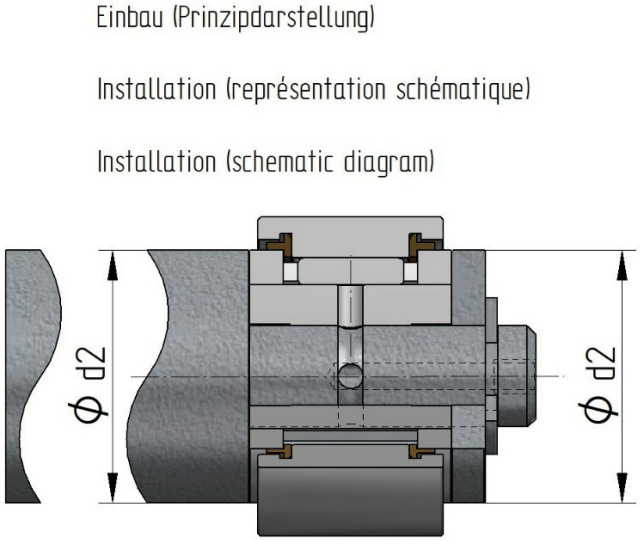

dimension	Description	[mm]	tolerance [µm]	DIN/ISO
d	nominal inner diameter	17	0 / -8	ISO 7063
D	nominal outer diameter	40	0 / -50	ISO 7063
d2	axial washer outer diameter	31.8		
B	inner ring width	21	0 / -210	WERKSNORM
C	outer ring width	20	0 / -120	ISO 7063
rs min.	minimal chamfer dimension	1		ISO 7063
R	radius outer ring	500		
Crw [N]	Effective dynamic load rating	10400		
C0rw [N]	Effective static load rating	12700		
Curw [N]	Effective fatigue limit load	1200		

calculation and operating data

load ratings	dynamic C [N]	fatique load limit load Cu [N]	DIN/ISO	static Co [N]	DIN/ISO
	12700	2230	281	17500	76

speed of rotation limit	reference n [1/min]	grease n [1/min]	oil n [1/min]
		2900	

operating temperature	max. [°C]	min. [°C]
	100	-20

bearing clearance	radial min. [µm]	max. [µm]
	10	35

article NATR 17 PP **Art-No.** 53050

material specification

description	material	DIN/ISO	hardness
Inner ring	100Cr6	683-17	58-65
Outer ring	100Cr6	683-17	58-65
Needle rollers	100Cr6	683-17	58-65
Seals	PA66		
Axial washers	100Cr6	683-17	58-65
Cage	Sheet steel		

All information in this document was provided and checked carefully. Nevertheless, we can not assume any liability for incomplete or faulty information.