Hans Saurer Kugellager AG
Niederfeld 38
CH-9320 Stachen

data sheet

general data/description

created: 18.01.2019 / 04

article NATR 12 PP OP BH2 **Art-No.** 50183 **brand** SKA **weight/kg** 0.071

remark Load ratings calculated according norms for rolling bearings. Rotational speed for F < 0.05 C0rw.

description

NATR	Design
12	Size
PP	Seals on both sides
OP	Optimized profile

greasing

BH2	KLÜBERSYNTH UH1 14-151

dimensions and tolerances

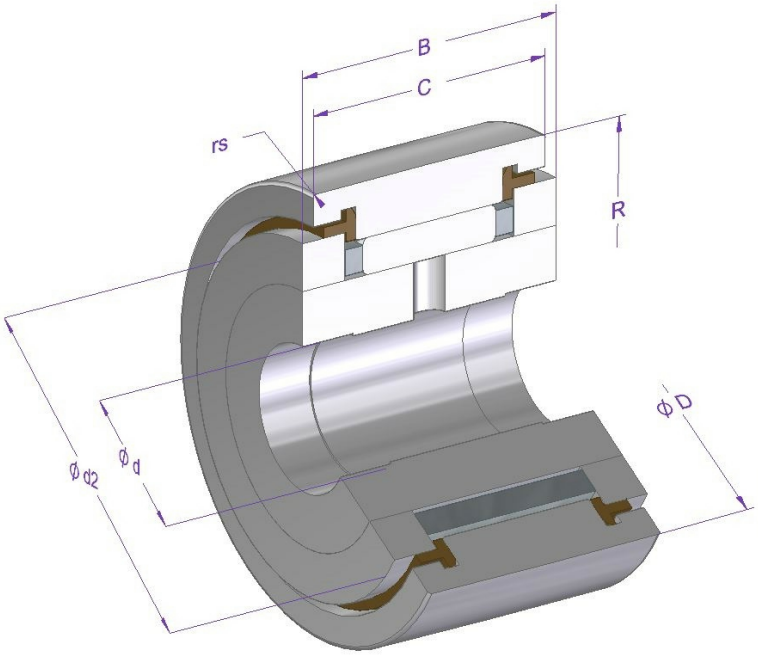

Einbau (Prinzipdarstellung)

Installation (représentation schématique)

Installation (schematic diagram)

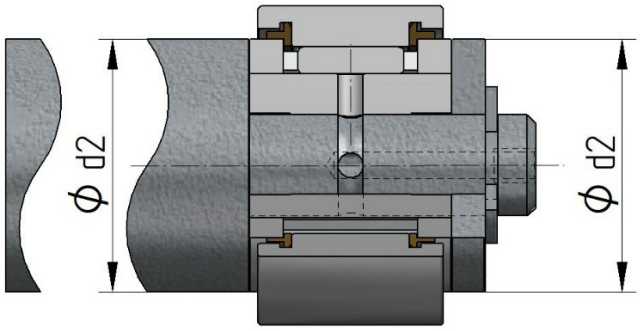

dimension	Description	[mm]	tolerance [µm]	DIN/ISO
d	nominal inner diameter	12	0 / -8	620-2
D	nominal outer diameter	32	0 / -50	WERKSNORM
d2	axial washer outer diameter	25		
B	inner ring width	15	0 / -180	WERKSNORM
C	outer ring width	14	0 / -120	620-2
rs min.	minimal chamfer dimension	0.6		ISO 7063
R	radius outer ring	OP		
Crw [N]	Effective dynamic load rating	7260		
C0rw [N]	Effective static load rating	7790		
Curw [N]	Effective fatigue limit load	850		

calculation and operating data

load ratings	dynamic C [N]	fatique load limit load Cu [N]	DIN/ISO	static Co [N]	DIN/ISO
	8180	1190	281	9970	76

speed of rotation limit	reference n [1/min]	grease n [1/min]	oil n [1/min]
		4500	

operating temperature	max. [°C]	min. [°C]
	100	-20

bearing clearance	radial min. [µm]	max. [µm]
	10	35

Hans Saurer Kugellager AG
Niederfeld 38
CH-9320 Stachen

article NATR 12 PP OP BH2 **Art-No.** 50183

material specification

description	material	DIN/ISO	hardness
Inner ring	100Cr6	683-17	58-65
Outer ring	100Cr6	683-17	58-65
Needle rollers	100Cr6	683-17	58-65
Seals	PA66		
Axial washers	100Cr6	683-17	58-65
Cage	Sheet steel		

All information in this document was provided and checked carefully. Nevertheless, we can not assume any liability for incomplete or faulty information.