Hans Saurer Kugellager AG
Niederfeld 38
CH-9320 Stachen

# data sheet

## general data/description

created: 10.08.2018 / 02 page: 1 / 1

**article** 606 2RS ST NS7 **Art-No.** 49769 **brand** SKA **weight/kg** 0.006

**description**

| | |
|---|---|
| 606 | Size |
| 2RS | Sealing washers on both sides, touching |
| ST | Accuracy |

**greasing**

| | |
|---|---|
| NS7 | KYODO YUSHI MULTEMP SRL |

## dimensions and tolerances

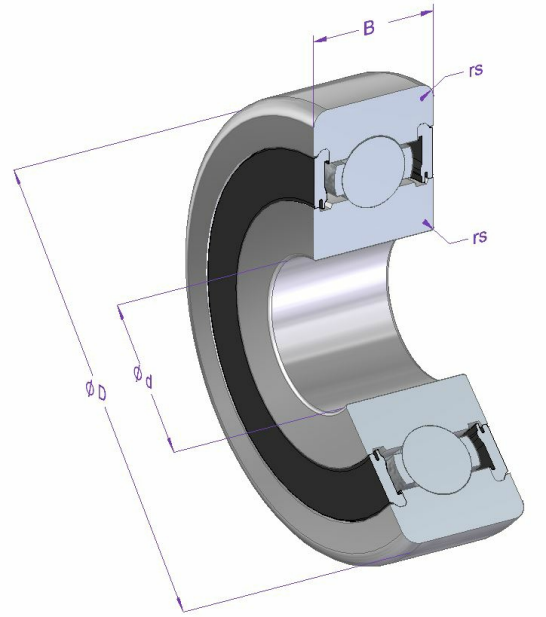


| dimension | Description | [mm] | tolerance [µm] | DIN/ISO |
|---|---|---|---|---|
| d | nominal inner diameter | 6 | 0 / -5 | SONDER |
| D | nominal outer diameter | 17 | 0 / -8 | 620-2 |
| B | width | 6 | 0 / -120 | 620-2 |
| rs min. | minimal chamfer dimension | 0.3 | | 616 |

## calculation and operating data

| | | | | | | |
|---|---|---|---|---|---|---|
| **load ratings** | **dynamic C [N]** | **fatique load limit load Cu [N]** | | **DIN/ISO** | **static Co [N]** | **DIN/ISO** |
| | 2180 | 44 | | 281 | 858 | 76 |
| **speed of rotation limit** | **reference n [1/min]** | **grease n [1/min]** | **oil n [1/min]** | | | |
| | | 34000 | | | | |
| **operating temperature** | **max. [°C]** | **min. [°C]** | | | | |
| | 120 | -20 | | | | |
| **bearing clearance** | **radial min. [µm]** | **max. [µm]** | | | | |
| | 2 | 13 | | | | |

## material specification

| description | material | DIN/ISO | hardness |
|---|---|---|---|
| Inner ring | 100Cr6 | 683-17 | 58-65 |
| Outer ring | 100Cr6 | 683-17 | 58-65 |
| Balls | 100Cr6 | 683-17 | 58-65 |
| Cage | St12 | | |
| Sealing washers | St12/NBR | | |

All information in this document was provided and checked carefully. Nevertheless, we can not assume any liability for incomplete or faulty information.