Hans Saurer Kugellager AG
Niederfeld 38
CH-9320 Stachen

data sheet

general data/description

created: 12.07.2018 / 02

article 608 MC3 **Art-No.** 49685 **brand** SKA **weight/kg** 0.012

description

608 Size
MC3 Internal clearance

dimensions and tolerances

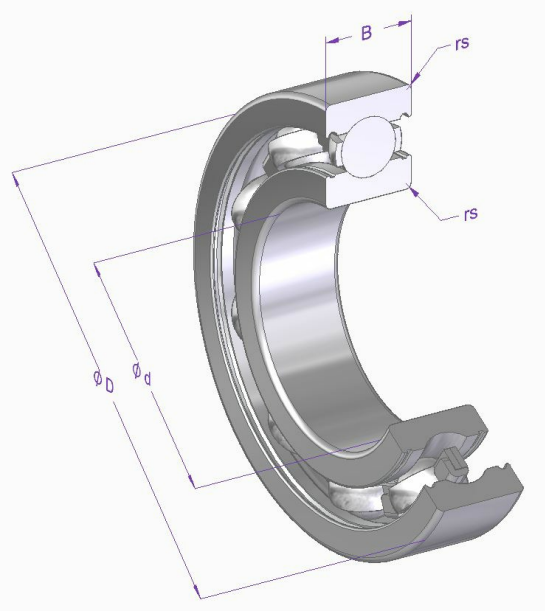

dimension	Description	[mm]	tolerance [µm]	DIN/ISO
d	nominal inner diameter	8	0 / -8	620-2
D	nominal outer diameter	22	0 / -9	620-2
B	width	7	0 / -120	620-2
rs min.	minimal chamfer dimension	0.3		625-1
MC3	internal clearance	0.005 / 0.010		WERKSNORM

calculation and operating data

load ratings	**dynamic C [N]**	**fatique load limit load Cu [N]**		**DIN/ISO**	**static Co [N]**	**DIN/ISO**
	3300	70		281	1370	76
speed of rotation limit	**reference n [1/min]**	**grease n [1/min]**	**oil n [1/min]**			
		34000	40000			
operating temperature	**max. [°C]**	**min. [°C]**				
	120	-20				
bearing clearance	**radial min. [µm]**	**max. [µm]**				
	5	10				

material specification

description	material	DIN/ISO	hardness
Inner ring	100Cr6	683-17	58-65
Outer ring	100Cr6	683-17	58-65
Balls	100Cr6	683-17	58-65
Cage	St12		

All information in this document was provided and checked carefully. Nevertheless, we can not assume any liability for incomplete or faulty information.