general data/description

created: 08.06.2018 / 05 page: 1 / 2

article KR 19 PP OP SK BH2 **Art-No.** 49486

brand SKA **weight/kg** 0.031

remark Tragzahlen gerechnet nach Normen für Wälzlager. Drehzahlen für F < 0.05 C0.

description

KR	Design
19	Size
PP	Seals on both sides
OP	Optimized profile
SK	Hexagon socket

greasing

BH2	KLÜBERSYNTH UH1 14-151

dimensions and tolerances

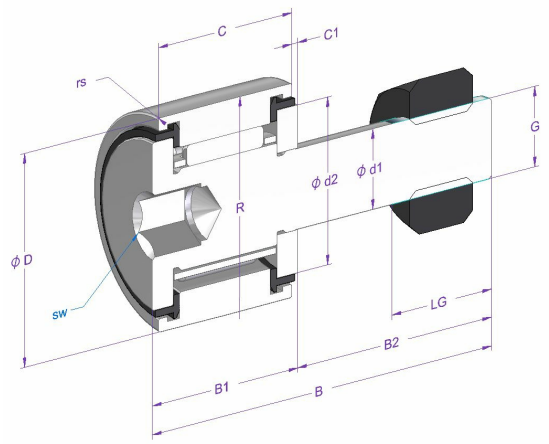

dimension	Description	[mm]	tolerance [µm]	DIN/ISO
d1	shaft diameter	8	-15 / 0	
d2	inner shoulder diameter	15		
D	nominal outer diameter	19	-50 / 0	
C	outer ring width	11	-120 / 0	620-2
C1	distance	0.6		
B	length	26	-200 / 200	
B1 max.	width	12.2		
B2	shaft lenght	13.8		
sw	wrench size	4		
rs min.	minimal chamfer dimension	0.15		
R	radius outer ring	OP		
LG	thread length	4		
G	thread	M8x1.25		
Crw [N]	Effective dynamic load rating	3610		
C0rw [N]	Effective static load rating	3570		
Curw [N]	Effective fatigue limit load	416		

calculation and operating data

load ratings	dynamic C [N]	fatique load limit load Cu [N]	DIN/ISO	static Co [N]	DIN/ISO
	4000	540	281	4200	76

speed of rotation limit	reference n [1/min]	grease n [1/min]	oil n [1/min]
		11000	

operating temperature	max. [°C]	min. [°C]
	120	-20

bearing clearance	radial min. [µm]	max. [µm]
	0	25

Hans Saurer Kugellager AG
Niederfeld 38
CH-9320 Stachen

article KR 19 PP OP SK BH2 **Art-No.** 49486

material specification

description	material	DIN/ISO	hardness
Outer ring	100Cr6	683-17	58-65
Roller stud	16CrMo4		58-65
Cylindrical rollers	100Cr6	683-17	58-65
Thrust washer	100Cr6	683-17	683-17
Seals	PA66		
Cage	Sheet steel		

All information in this document was provided and checked carefully. Nevertheless, we can not assume any liability for incomplete or faulty information.