general data/description

created: 30.10.2017 / 04 page: 1 / 2

article 607 ZZ MC3 NS7 **Art-No.** 48961 **brand** SKA **weight/kg** 0.0074

description

607	Size
ZZ	Shields on both sides, not touching
MC3	Internal clearance

greasing

NS7	KYODO YUSHI MULTEMP SRL

dimensions and tolerances

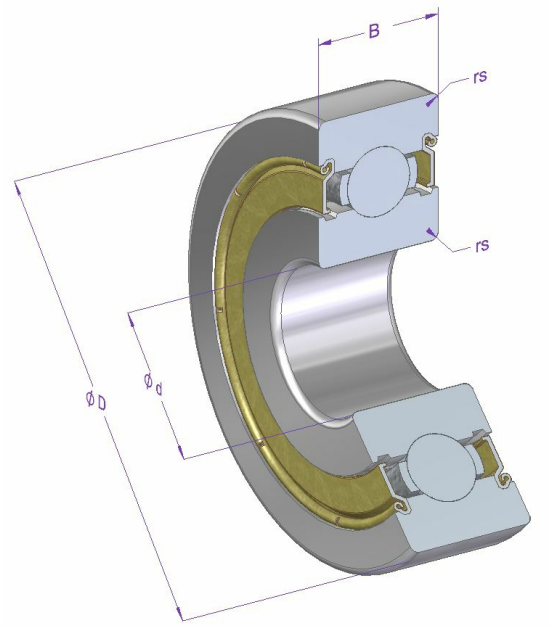

dimension	Description	[mm]	tolerance [µm]	DIN/ISO
d	nominal inner diameter	7	0 / -8	620-2
D	nominal outer diameter	19	0 / -9	620-2
B	width	6	0 / -120	620-2
rs min.	minimal chamfer dimension	0.3		625-1
MC3	internal clearance	0.005 / 0.010		WERKSNORM

calculation and operating data

load ratings	dynamic C [N]	fatique load limit load Cu [N]	DIN/ISO	static Co [N]	DIN/ISO
	2240	47	281	911	76

speed of rotation limit	reference n [1/min]	grease n [1/min]	oil n [1/min]
		36000	

operating temperature	max. [°C]	min. [°C]
	120	-20

bearing clearance	radial min. [µm]	max. [µm]
	5	10

material specification

description	material	DIN/ISO	hardness
Inner ring	100Cr6	683-17	58-65
Outer ring	100Cr6	683-17	58-65
Balls	100Cr6	683-17	58-65
Cage	St12		
Shields	Sheet steel		

Hans Saurer Kugellager AG
Niederfeld 38
CH-9320 Stachen

article 607 ZZ MC3 NS7 **Art-No.** 48961

All information in this document was provided and checked carefully. Nevertheless, we can not assume any liability for incomplete or faulty information.