**Hans Saurer Kugellager AG**
**Niederfeld 38**
**CH-9320 Stachen**

## general data/description

created: 19.01.2016 / 05 page: 1 / 2

**article** KR 26 PP OP SK LX3 **Art-No.** 46789 **brand** SKA **weight/kg** 0.058

**remark** Load ratings calculated according norms for rolling bearings. Rotational speed for F < 0.05 C0rw.

**description**

| | |
|---|---|
| KR | Design |
| 26 | Size |
| PP | Seals on both sides |
| OP | Optimized profile |
| SK | Hexagon socket |

**greasing**

| | |
|---|---|
| LX3 | SHELL GADUS S3 V220C 2 |

## dimensions and tolerances

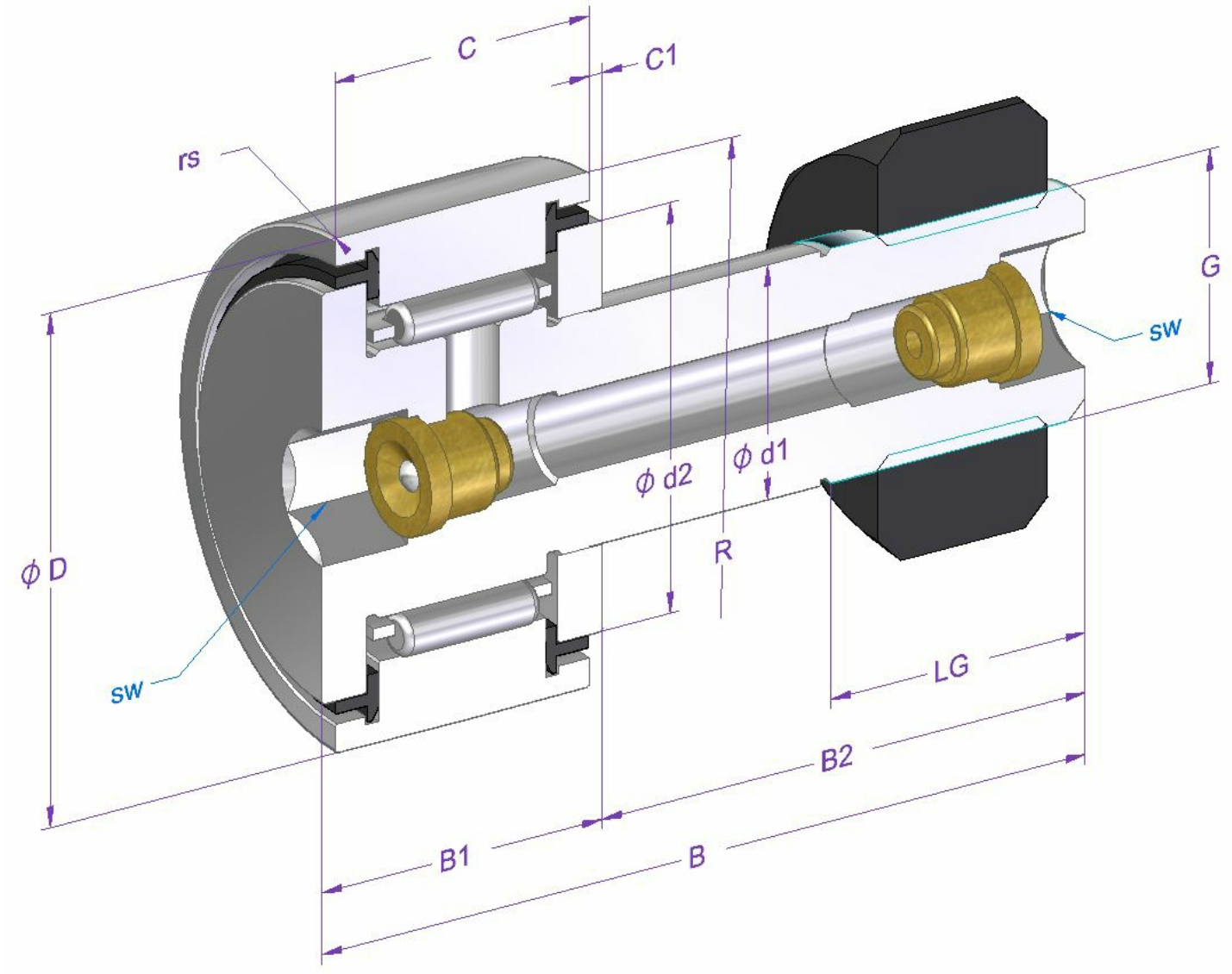


| dimension | Description | [mm] | tolerance [µm] | DIN/ISO |
|---|---|---|---|---|
| d1 | shaft diameter | 10 | 0 / -15 | WERKSNORM |
| d2 | inner shoulder diameter | 17.5 | | |
| D | nominal outer diameter | 26 | 0 / -50 | WERKSNORM |
| C | outer ring width | 12 | 0 / -120 | 620-2 |
| C1 | distance | 0.6 | | |
| B | length | 36 | -300 / 600 | WERKSNORM |
| B1 max. | width | 13.2 | | |
| B2 | shaft lenght | 23 | | |
| sw | wrench size | 5 | | |
| rs min. | minimal chamfer dimension | 0.3 | | |
| R | radius | OP | | |

**article** KR 26 PP OP SK LX3 **Art-No.** 46789

| dimension | Description | [mm] | tolerance [µm] | DIN/ISO |
|---|---|---|---|---|
| LG | thread length | 12 | | |
| G | thread | M10x1 | | |
| Crw [N] | Effective dynamic load rating | 5160 | | |
| C0rw [N] | Effective static load rating | 4950 | | |
| Curw [N] | Effective fatigue limit load | 410 | | |

## calculation and operating data

| load ratings | dynamic C [N] | fatique load limit load Cu [N] | DIN/ISO | static Co [N] | DIN/ISO |
|---|---|---|---|---|---|
| | 5300 | 725 | 281 | 5830 | 76 |

| speed of rotation limit | reference n [1/min] | grease n [1/min] | oil n [1/min] |
|---|---|---|---|
| | | 8000 | |

| operating temperature | max. [°C] | min. [°C] |
|---|---|---|
| | 120 | -20 |

| bearing clearance | radial min. [µm] | max. [µm] |
|---|---|---|
| | 0 | 25 |

## material specification

| description | material | DIN/ISO | hardness |
|---|---|---|---|
| Outer ring | 100Cr6 | 683-17 | 58-65 |
| Roller stud | 16CrMo4 | | |
| Needle rollers | 100Cr6 | 683-17 | 58-65 |
| Cage | Sheet steel | | |
| Thrust washer | 100Cr6 | 683-17 | 58-65 |
| Seals | PA66 | | |

All information in this document was provided and checked carefully. Nevertheless, we can not assume any liability for incomplete or faulty information.