general data/description

created: 12.03.2021 / 01 page: 1 / 2

article NATR 17 PP X LX3 **Art-No.** 46579 **brand** SKA **weight/kg** 0.144

remark Load ratings calculated according norms for rolling bearings. Rotational speed for F < 0.05 C0rw.

description

NATR	Design
17	Size
PP	Seals on both sides
X	Cylindrical lateral surface

greasing

LX3	SHELL GADUS S3 V220C 2

dimensions and tolerances

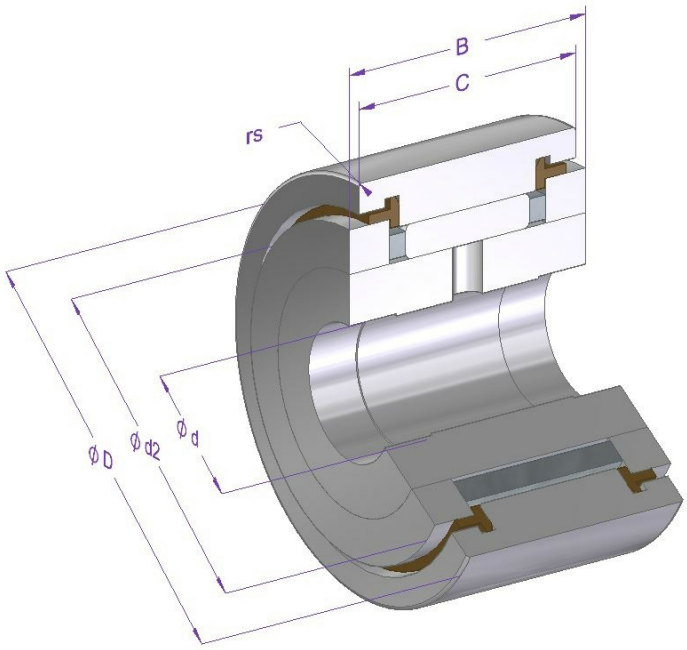

Einbau (Prinzipdarstellung)

Installation (représentation schématique)

Installation (schematic diagram)

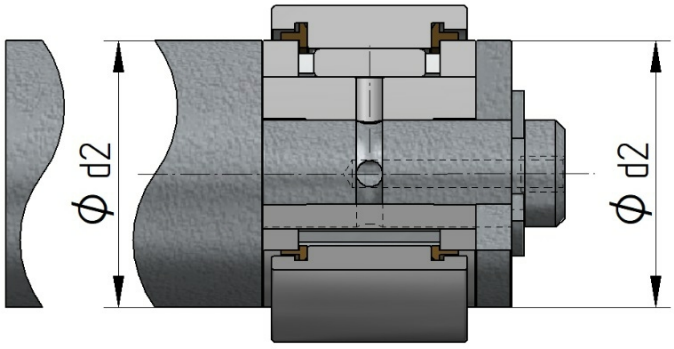

dimension	Description	[mm]	tolerance [µm]	DIN/ISO
d	nominal inner diameter	17	0 / -8	620-2
D	nominal outer diameter	40	0 / -11	620-2
d2	axial washer outer diameter	31.5		
B	inner ring width	21	0 / -210	WERKSNORM
C	outer ring width	20	0 / -120	620-2
rs min.	minimal chamfer dimension	1		ISO 7063
Crw [N]	Effective dynamic load rating	11700		
C0rw [N]	Effective static load rating	14300		
Curw [N]	Effective fatigue limit load	1730		

calculation and operating data

load ratings	dynamic C [N]	fatique load limit load Cu [N]	DIN/ISO	static Co [N]	DIN/ISO
	13700	2560	281	19200	76

speed of rotation limit	reference n [1/min]	grease n [1/min]	oil n [1/min]
		2900	

operating temperature	max. [°C]	min. [°C]
	100	-20

bearing clearance	radial min. [µm]	max. [µm]
	10	35

article NATR 17 PP X LX3 **Art-No.** 46579

material specification

description	material	DIN/ISO	hardness
Inner ring	100Cr6	683-17	58-65
Outer ring	100Cr6	683-17	58-65
Needle rollers	100Cr6	683-17	58-65
Cage	Sheet steel		
Seals	PA66		
Axial washers	100Cr6	683-17	58-65

All information in this document was provided and checked carefully. Nevertheless, we can not assume any liability for incomplete or faulty information.