Hans Saurer Kugellager AG
Niederfeld 38
CH-9320 Stachen

data sheet

general data/description

created: 26.03.2015 / 03

article NA 22/8 2RS LX3 **Art-No.** 45890 **brand** SKA **weight/kg** 0.034

remark Load ratings calculated according norms for rolling bearings. Also depending on mating track.

description

NA	Design
22/8	Size
2RS	Sealing washers on both sides, touching

greasing

LX3	SHELL GADUS S3 V220C 2

dimensions and tolerances

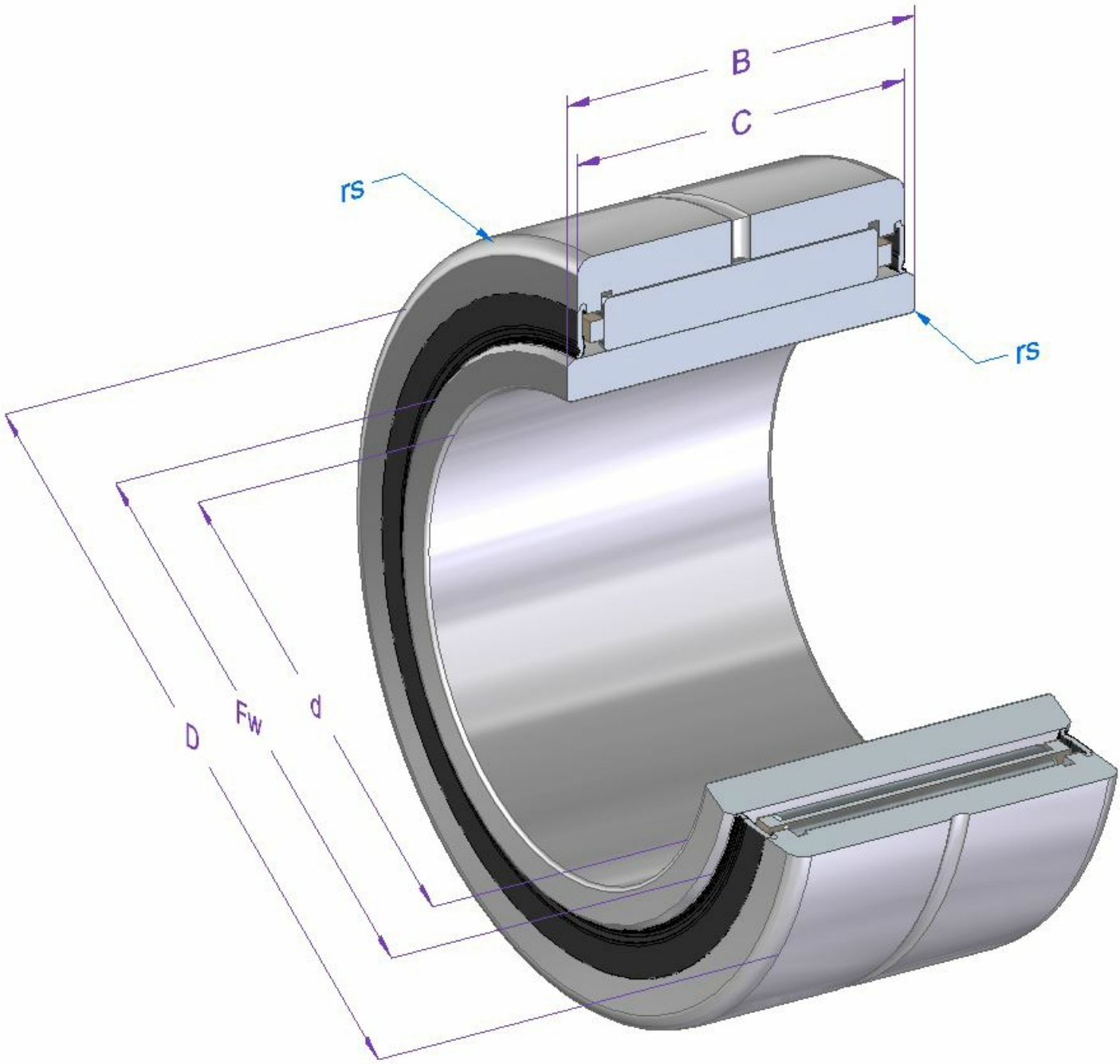

dimension	Description	[mm]	tolerance [µm]	DIN/ISO
d	nominal inner diameter	8	0 / -8	620-2
D	nominal outer diameter	24	0 / -50	
Fw	inner enveloping circle diameter	12		
B	inner ring width	12	0 / -120	620-2
C	outer ring width	11.8	0 / -120	620-2
rs min.	minimal chamfer dimension	0.3		

article NA 22/8 2RS LX3 **Art-No.** 45890

calculation and operating data

load ratings	**dynamic C [N]**	**fatique load limit load Cu [N]**		**DIN/ISO**	**static Co [N]**	**DIN/ISO**
	5400			281	4900	76
speed of rotation limit	**reference n [1/min]**	**grease n [1/min]**	**oil n [1/min]**			
		7000				
operating temperature	**max. [°C]**	**min. [°C]**				
	120	-20				
bearing clearance	**radial min. [µm]**	**max. [µm]**				
	20	45				

material specification

description	material	DIN/ISO	hardness
Inner ring	100Cr6	683-17	58-65
Outer ring	100Cr6	683-17	58-65
Needle rollers	100Cr6	683-17	58-65
Cage	Sheet steel		
Sealing washers	Sheet steel/NBR		

All information in this document was provided and checked carefully. Nevertheless, we can not assume any liability for incomplete or faulty information.