Hans Saurer Kugellager AG
Niederfeld 38
CH-9320 Stachen

data sheet

general data/description

article KR 22 X SK LX3 **Art-No.** 44294 **brand** SKA **weight/kg** 0.052

remark Tragzahlen gerechnet nach Normen für Wälzlager. Drehzahlen für F < 0.05 C0.

description

KR	Design
22	Size
X	Cylindrical lateral surface
SK	Hexagon socket

greasing

LX3	SHELL GADUS S3 V220C 2

dimensions and tolerances

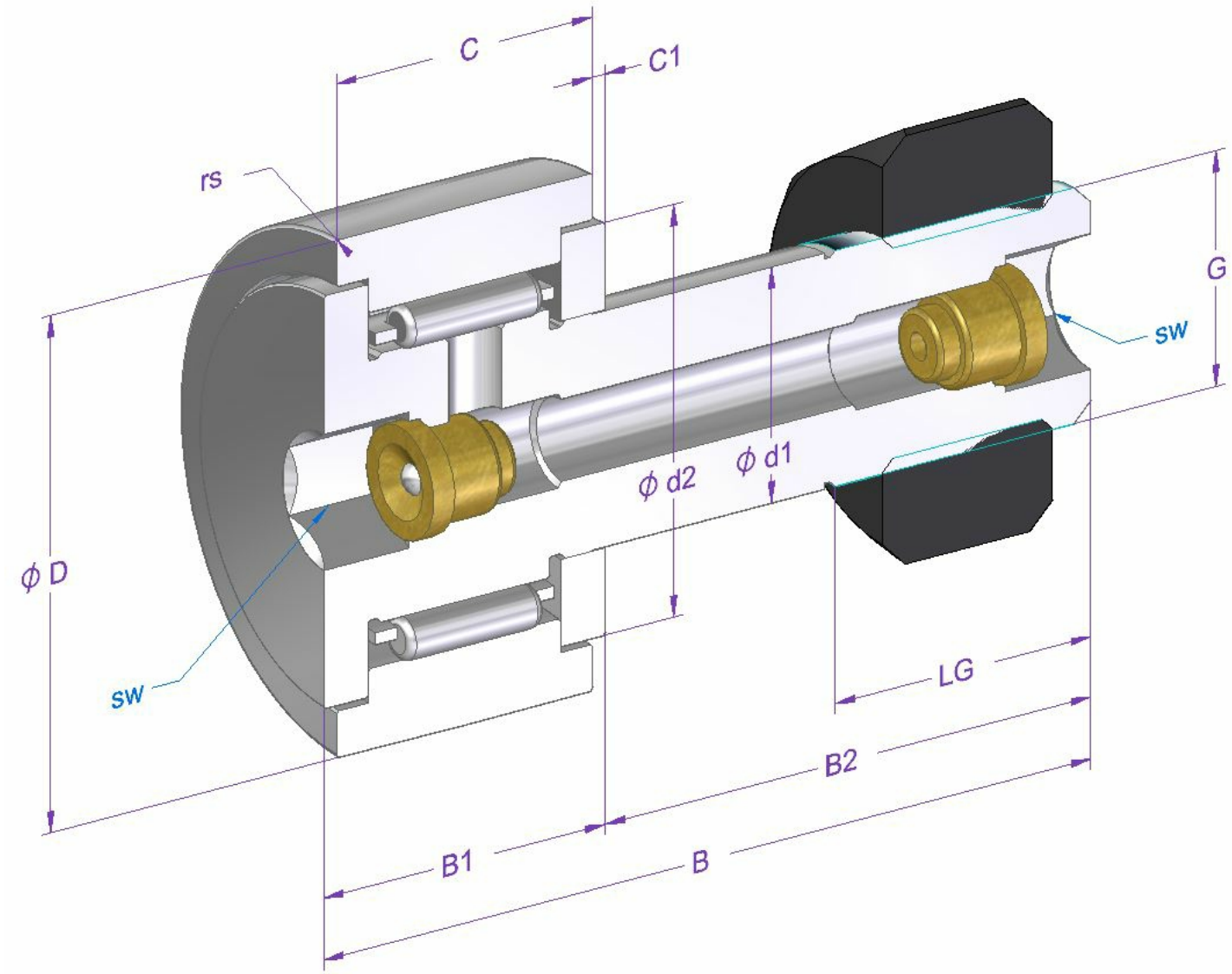

dimension	Description	[mm]	tolerance [µm]	DIN/ISO
d1	shaft diameter	10	0 / -15	
d2	inner shoulder diameter	17.5		
D	nominal outer diameter	22	0 / -9	620-2
C	outer ring width	12	0 / -120	
C1	distance	0.6		
B	length	36	-300 / 600	
B1 max.	width	13.2		
B2	shaft lenght	23		
G	thread	M10x1		
LG	thread length	12		
sw	wrench size	5		
rs min.	minimal chamfer dimension	0.3		

Hans Saurer Kugellager AG
Niederfeld 38
CH-9320 Stachen

article KR 22 X SK LX3 **Art-No.** 44294

calculation and operating data

load ratings	**dynamic C [N]**	**fatique load limit load Cu [N]**		**DIN/ISO**	**static Co [N]**	**DIN/ISO**
	5300			281	6200	76
speed of rotation limit	**reference n [1/min]**	**grease n [1/min]**	**oil n [1/min]**			
		8000				
operating temperature	**max. [°C]**	**min. [°C]**				
	120	-20				
bearing clearance	**radial min. [µm]**	**max. [µm]**				
	0	25				

material specification

description	material	DIN/ISO	hardness
Outer ring	100Cr6	683-17	58-65
Roller stud	16CrMo4		
Needle rollers	100Cr6	683-17	58-65
Cage	Sheet steel		
Thrust washer	100Cr6	683-17	58-65

All information in this document was provided and checked carefully. Nevertheless, we can not assume any liability for incomplete or faulty information.