## general data/description

created: 04.05.2015 / 03 page: 1 / 2

**article** KR 16 PP OP SK LX3 **Art-No.** 44170 **brand** SKA **weight/kg** 0.018

**remark** Load ratings calculated according norms for rolling bearings. Also depending on mating track.

**description**

| | |
|---|---|
| KR | Design |
| 16 | Size |
| PP | Seals on both sides |
| OP | Optimized profile |
| SK | Hexagon socket |

**greasing**

| | |
|---|---|
| LX3 | SHELL GADUS S3 V220C 2 |

## dimensions and tolerances

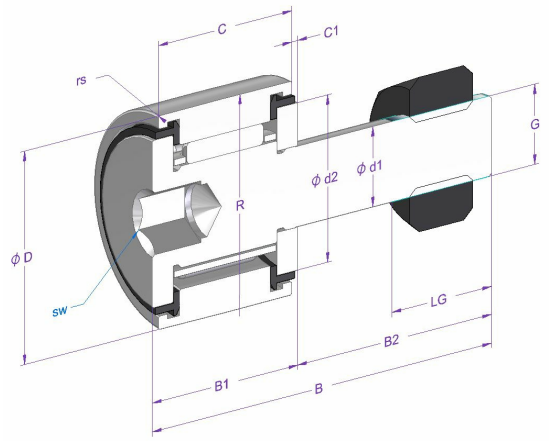


| dimension | Description | [mm] | tolerance [µm] | DIN/ISO |
|---|---|---|---|---|
| d1 | shaft diameter | 6 | -12 / 0 | |
| d2 | inner shoulder diameter | 12.5 | | |
| D | nominal outer diameter | 16 | -50 / 0 | |
| C | outer ring width | 11 | -120 / 0 | |
| C1 | distance | 0.6 | | |
| B | length | 28 | -300 / 600 | |
| B1 max. | width | 12.2 | | |
| B2 | shaft lenght | 16 | | |
| sw | wrench size | 4 | | |
| rs min. | minimal chamfer dimension | 0.15 | | |
| R | radius outer ring | OP | | |
| LG | thread length | 8 | | |
| G | thread | M6x1 | | |

## calculation and operating data

| load ratings | dynamic C [N] | fatique load limit load Cu [N] | DIN/ISO | static Co [N] | DIN/ISO |
|---|---|---|---|---|---|
| | 3600 | | 281 | 3500 | 76 |

| speed of rotation limit | reference n [1/min] | grease n [1/min] | oil n [1/min] |
|---|---|---|---|
| | | 14000 | |

| operating temperature | max. [°C] | min. [°C] |
|---|---|---|
| | 120 | -20 |

| bearing clearance | radial min. [µm] | max. [µm] |
|---|---|---|
| | 0 | 25 |

**article** KR 16 PP OP SK LX3 **Art-No.** 44170

## material specification

| description | material | DIN/ISO | hardness |
|---|---|---|---|
| Outer ring | 100Cr6 | 683-17 | 58-65 |
| Roller stud | 16CrMo4 | | |
| Needle rollers | 100Cr6 | 683-17 | 58-65 |
| Cage | Sheet steel | | |
| Thrust washer | 100Cr6 | 683-17 | 58-65 |
| Seals | PA66 | | |

All information in this document was provided and checked carefully. Nevertheless, we can not assume any liability for incomplete or faulty information.