Hans Saurer Kugellager AG
Niederfeld 38
CH-9320 Stachen

data sheet

general data/description

created: 09.07.2019 / 02

article 604 ZZ MC3 NS7 **Art-No.** 43886 **brand** SKA **weight/kg** 0.003

description

604	Size
ZZ	Shields on both sides, not touching
MC3	Internal clearance

greasing

NS7	KYODO YUSHI MULTEMP SRL

dimensions and tolerances

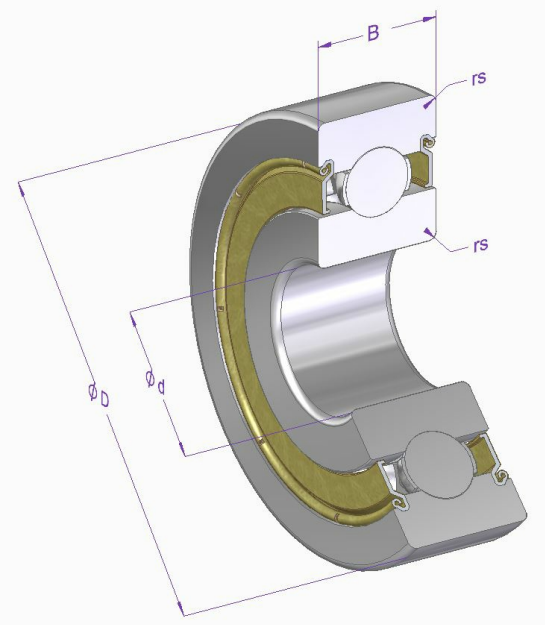

dimension	Description	[mm]	tolerance [µm]	DIN/ISO
d	nominal inner diameter	4	0 / -8	620-2
D	nominal outer diameter	12	0 / -8	620-2
B	width	4	0 / -120	620-2
rs min.	minimal chamfer dimension	0.2		616
MC3	internal clearance	0.005 / 0.010		WERKSNORM

calculation and operating data

load ratings	dynamic C [N]	fatique load limit load Cu [N]	DIN/ISO	static Co [N]	DIN/ISO
	717	15	281	282	76

speed of rotation limit	reference n [1/min]	grease n [1/min]	oil n [1/min]
		48000	

operating temperature	max. [°C]	min. [°C]
	120	-20

bearing clearance	radial min. [µm]	max. [µm]
	5	10

material specification

description	material	DIN/ISO	hardness
Inner ring	100Cr6	683-17	58-65
Outer ring	100Cr6	683-17	58-65
Balls	100Cr6	683-17	58-65
Cage	St12		
Shields	St12		

Hans Saurer Kugellager AG
Niederfeld 38
CH-9320 Stachen

article 604 ZZ MC3 NS7 **Art-No.** 43886

All information in this document was provided and checked carefully. Nevertheless, we can not assume any liability for incomplete or faulty information.