Hans Saurer Kugellager AG
Niederfeld 38
CH-9320 Stachen

data sheet

general data/description

created: 08.09.2014 / 06

article NATR 12 LX3 **Art-No.** 43562 **brand** SKA **weight/kg** 0.071

description

NATR Design
12 Size

remark Load ratings calculated according norms for rolling bearings. Rotational speed for F < 0.05 C0rw.

greasing

LX3 SHELL GADUS S3 V220C 2

dimensions and tolerances

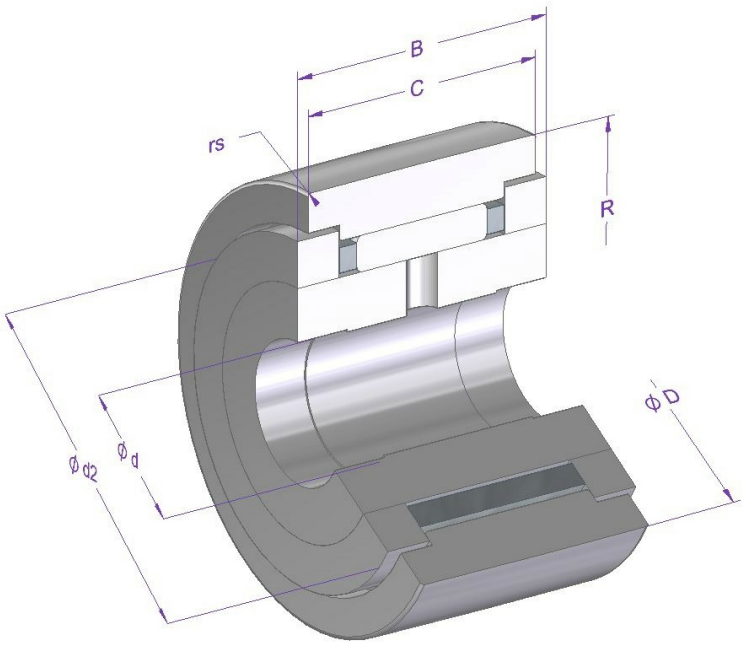

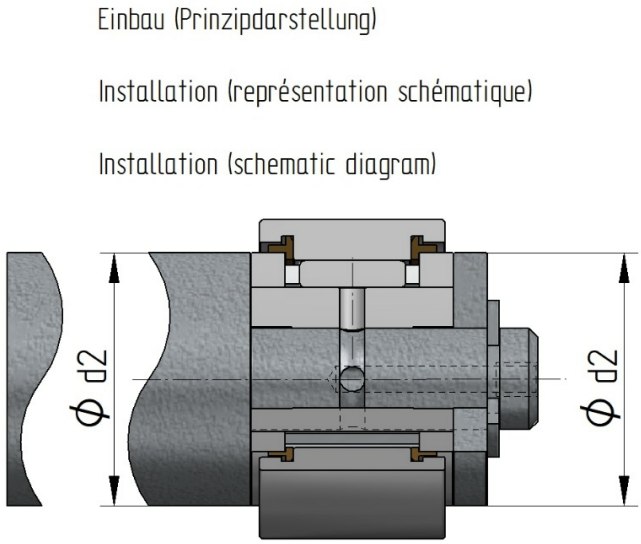

dimension	Description	[mm]	tolerance [µm]	DIN/ISO
d	nominal inner diameter	12	0 / -8	620-2
D	nominal outer diameter	32	0 / -50	WERKSNORM
d2	axial washer outer diameter	25		
B	inner ring width	15	0 / -180	WERKSNORM
C	outer ring width	14	0 / -120	620-2
rs min.	minimal chamfer dimension	0.6		ISO 7063
R	radius outer ring	500		
Crw [N]	Effective dynamic load rating	7260		
C0rw [N]	Effective static load rating	7790		
Curw [N]	Effective fatigue limit load	850		

calculation and operating data

load ratings	dynamic C [N]	fatique load limit load Cu [N]	DIN/ISO	static Co [N]	DIN/ISO
	8180	1190	281	9970	76

speed of rotation limit	reference n [1/min]	grease n [1/min]	oil n [1/min]
		4500	

operating temperature	max. [°C]	min. [°C]
	120	-20

bearing clearance	radial min. [µm]	max. [µm]
	10	35

article NATR 12 LX3 **Art-No.** 43562

material specification

description	material	DIN/ISO	hardness
Inner ring	100Cr6	683-17	58-65
Outer ring	100Cr6	683-17	58-65
Needle rollers	100Cr6	683-17	58-65
Axial washers	100Cr6	683-17	58-65
Cage	Sheet steel		

All information in this document was provided and checked carefully. Nevertheless, we can not assume any liability for incomplete or faulty information.