Hans Saurer Kugellager AG
Niederfeld 38
CH-9320 Stachen

data sheet

general data/description

created: 23.03.2018 / 04

article NATR 15 PP X LX3 **Art-No.** 43559 **brand** SKA **weight/kg** 0.103

remark Load ratings calculated according norms for rolling bearings. Rotational speed for F < 0.05 C0rw.

description

NATR	Design
15	Size
PP	Seals on both sides
X	Cylindrical lateral surface

greasing

LX3	SHELL GADUS S3 V220C 2

dimensions and tolerances

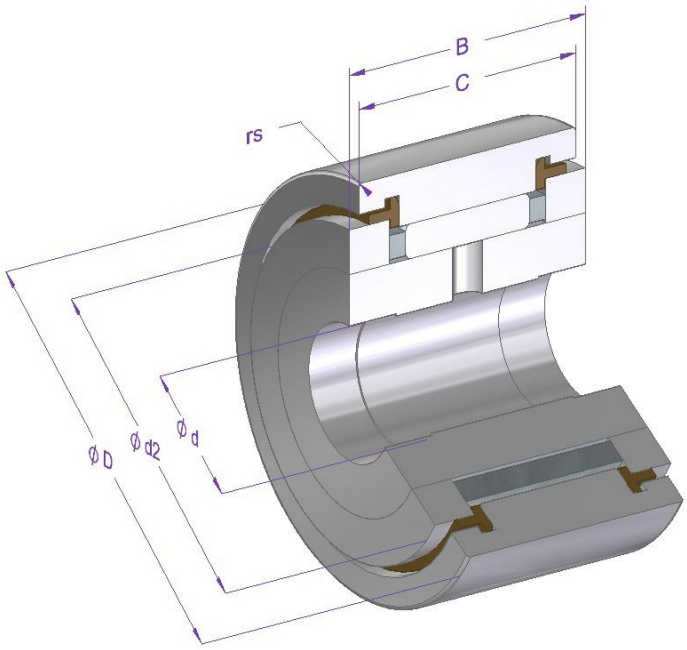

Einbau (Prinzipdarstellung)

Installation (représentation schématique)

Installation (schematic diagram)

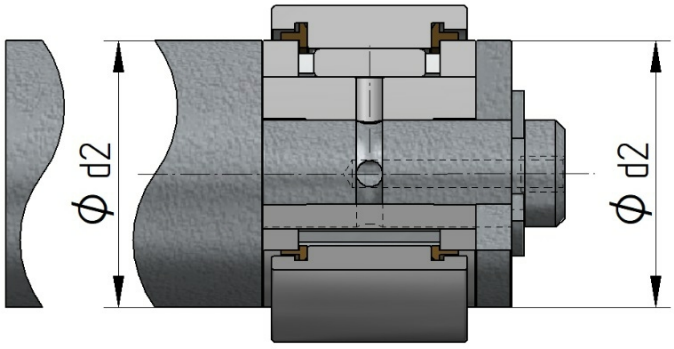

dimension	Description	[mm]	tolerance [µm]	DIN/ISO
d	nominal inner diameter	15	0 / -8	620-2
D	nominal outer diameter	35	0 / -11	620-2
B	inner ring width	19	0 / -210	WERKSNORM
C	outer ring width	18	0 / -120	620-2
d2	axial washer outer diameter	27.6		
rs min.	minimal chamfer dimension	0.6		ISO 7063
Crw [N]	Effective dynamic load rating	10200		
C0rw [N]	Effective static load rating	12800		
Curw [N]	Effective fatigue limit load	1610		

calculation and operating data

load ratings	dynamic C [N]	fatique load limit load Cu [N]	DIN/ISO	static Co [N]	DIN/ISO
	12400	2500	281	17900	76

speed of rotation limit	reference n [1/min]	grease n [1/min]	oil n [1/min]
		3600	

operating temperature	max. [°C]	min. [°C]
	100	-20

bearing clearance	radial min. [µm]	max. [µm]
	10	35

article NATR 15 PP X LX3 **Art-No.** 43559

material specification

description	material	DIN/ISO	hardness
Inner ring	100Cr6	683-17	58-65
Outer ring	100Cr6	683-17	58-65
Needle rollers	100Cr6	683-17	58-65
Cage	Sheet steel		
Seals	PA66		
Axial washers	100Cr6	683-17	58-65

All information in this document was provided and checked carefully. Nevertheless, we can not assume any liability for incomplete or faulty information.