Hans Saurer Kugellager AG
Niederfeld 38
CH-9320 Stachen

data sheet

general data/description

created: 09.07.2010 / 02

article 608 2RS C3 NS7 **Art-No.** 26954 **brand** SKA **weight/kg** 0.012

description

608	Size
2RS	Sealing washers on both sides, touching
C3	Internal clearance

greasing

NS7	KYODO YUSHI MULTEMP SRL

dimensions and tolerances

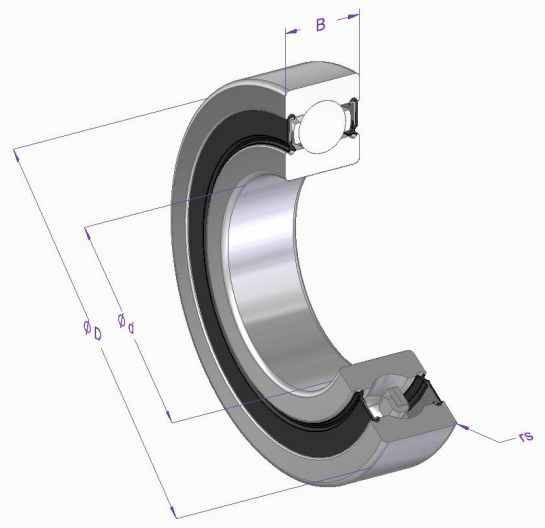

dimension	Description	[mm]	tolerance [µm]	DIN/ISO
d	nominal inner diameter	8	0 / -8	620-2
D	nominal outer diameter	22	0 / -9	620-2
B	width	7	0 / -120	620-2
rs min.	minimal chamfer dimension	0.3		625-1
C3	internal clearance	0.008 / 0.023		620-4

calculation and operating data

load ratings	**dynamic C [N]**	**fatique load limit load Cu [N]**		**DIN/ISO**	**static Co [N]**	**DIN/ISO**
	3300	69		281	1370	76
speed of rotation limit	**reference n [1/min]**	**grease n [1/min]**	**oil n [1/min]**			
		28000				
operating temperature	**max. [°C]**	**min. [°C]**				
	120	-20				
bearing clearance	**radial min. [µm]**	**max. [µm]**				
	8	23				
bearing clearance	**axial min. [µm]**	**max. [µm]**				

material specification

description	material	DIN/ISO	hardness
Inner ring	100Cr6	683-17	58-65
Outer ring	100Cr6	683-17	58-65
Balls	100Cr6	683-17	58-65
Cage	Sheet steel		
Sealing washers	Sheet steel/NBR		

All information in this document was provided and checked carefully. Nevertheless, we can not assume any liability for incomplete or faulty information.